http://www.democrat-project.efacec.com/

DEMOCRAT

Deliverable D5.4 – Demonstration Site Integration Report

Activity: Integration of the solution components and installation in the demonstrator's grid

Editor:	Paulo Matos
Dissemination level: (Confidentiality)	Public
Suggested readers:	DEMOCRAT Team
Version:	1.1
Total number of pages:	12
Keywords:	Demonstrator, batteries, battery inverter, MBMS, BMS, micro-grids, integration

DEMOCRAT ABSTRACT

The DEMOCRAT project aims at demonstrating an integrated and innovative micro-grid concept applied to LV and MV networks, as a suitable solution for efficiently managing their distributed energy resources (DER), working simultaneously as a flexible asset of the distribution networks.

DEMOCRAT is a project co-funded by:

COMPETE 2020 PORTUGAL 2020 UNIÃO EUROPEIA Fundo Europeu de Desenvolvimento Regional

Document

Name	Deliverable D5.4 – Demonstration Site Integration Report	
Document No.	AS20000084	
Revision and Date	1.1	2020-01-28
Project	DEMOCRAT	
Made by	Paulo Matos	
Reviewed by	Filipe Pereira	
Approved by	Manuel Pinto	
Total Pages	12	

Language Requirements (for non-native English speakers)

In order to fully understand the content of this document, it is therefore recommended that the reader possesses a language proficiency equivalent to B1 level, according to European Language Levels

Disclosure

This document contains information, which is confidential in nature and proprietary to EFACEC, Automation Business Unit, and shall not be reproduced or transferred to other documents or referenced, or disclosed in any manner to any person or used for any purpose other than that for which it is furnished without the prior express written permission of EFACEC

Revisions

Rev.	Date	Comments	Author
1.0	2019-03-29	Document release	Paulo Matos
1.1	2020-01-28	Correction of website URL	Alberto Bernardo

Executive Summary

This deliverable presents the report of the integration of all components at the demonstrator site.

The activities performed and described in this deliverable comprise:

- Main components description
- Architecture of the integrated components
- Integration report

Table of Contents

List of Figures

List of Tables

NO TABLE OF FIGURES ENTRIES FOUND.

Glossary

BMS	Battery Management System
DER	Distributed Energy Resources
IED	Intelligent Electronic Device
LV	Low Voltage
MBMS	Master Battery Management System
MV	Medium Voltage

1. Introduction

1.1 Scope and Purpose

The aim of this deliverable is to present the report of the integration of all components at the demonstrator site.

The activities performed and described in this deliverable comprise:

- Main components description
- Architecture of the integrated components
- Integration report

The components meant to be integrated for the real testbed demonstrator comprise the battery system and the power conversion system, composed by the inverter and the energy storage controller, as well as the microgrid manager and the overall microgrid loads.

The present deliverable uses as reference a previous one performed in Activity 5, which is Deliverable D5.1 – Demonstrator Installation Plan.

2. Main Components Description

The list of the integrated components is the following:

- Two (2) battery racks
  - Sizing: 2 * (109 kW / 109 kWh)
  - Comprising two (2) BMS and One (1) MBMS
- One (1) battery inverter
  - Sizing: 250 kVA
- One (1) 250 kVA load bank
- One (1) 250 kVA decoupling transformer (0.315 / 0.4 kV) connected to the LV grid
- One (1) 50 kW Quick Charger
- One (1) storage controller
- Set of DC power cables
- DC voltage and current sensors

3. Architecture of the Integrated Components

Figure 1 depicts the overall integration of the components at the demonstration site.

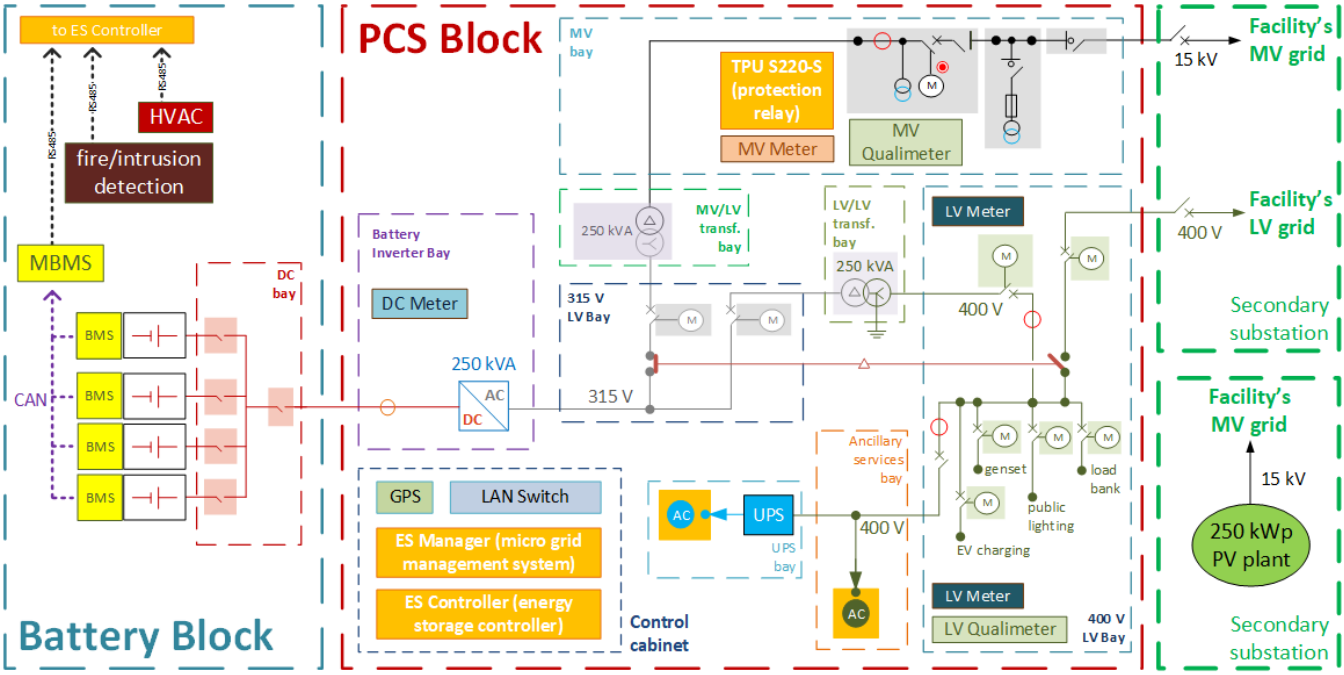

Figure 1 - Architecture of the integrated components at the demonstration site

4. Integration Report

The integration of the components was carried out according to the plan:

- The integration of the demo site components was performed in January 2020, which comprised the full setup, corresponding to the set of two battery racks, one storage controller, one microgrid management system, one MBMS and one 250 kVA inverter, the latter connected to a 250 kVA LV/LV transformer, serving a microgrid with two loads, namely a 250 kVA load bank and a EV quick charger of 50 kW nominal active power;
    - This integration allowed the team to perform the tests of the interconnected and isolated microgrid, namely, to test the charging/discharging of the batteries, as well as to test their operation in:
        - Peak-shaving mode
        - Active power mode
        - Load/renewable generation following
        - Renewable generation smoothing
        - Renewable generation dispatching
        - Power factor correction
    - This integration allowed also the team to perform the tests of the isolated microgrid, namely, to test the conversion system, namely its operation in real conditions:
        - Grid interconnected mode, performing grid support features
        - Isolated mode, performing grid forming features

The step up transformer (250 kVA, 0.4/15 kV), the MV grid switchgear and corresponding IED were not integrated at the demonstrator site, although being installed, because no MV infrastructure grid was available at the selected demonstration site, which is temporary.

4.1 Evidences of the Integration Process

Figure 2, Figure 3, Figure 4, Figure 5 and Figure 6 show the integrated system, either at the demonstration site or through the human-machine interface of the integrated microgrid management system.

Figure 2 – View of part of the integrated system

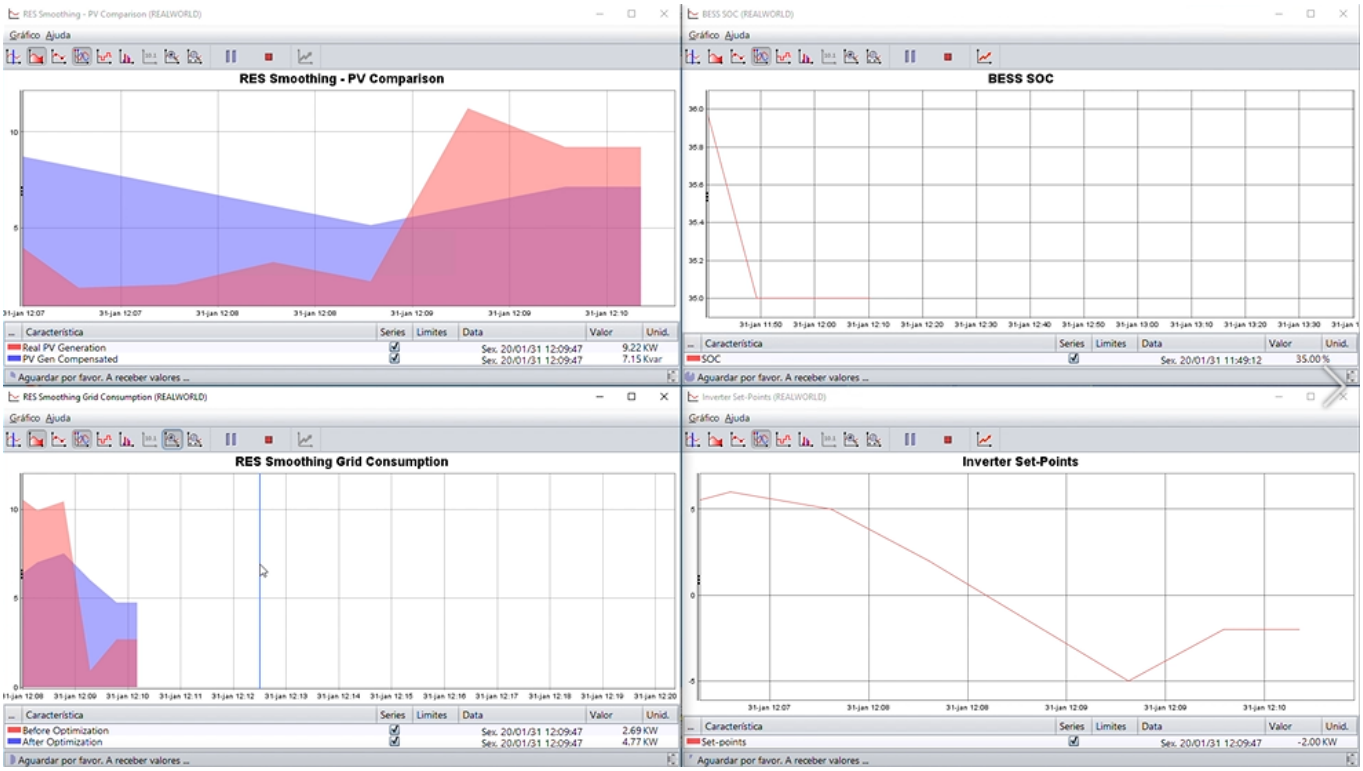

Figure 3 – View of the management system, providing real-time data from the grid – Use Case: renewables smoothing

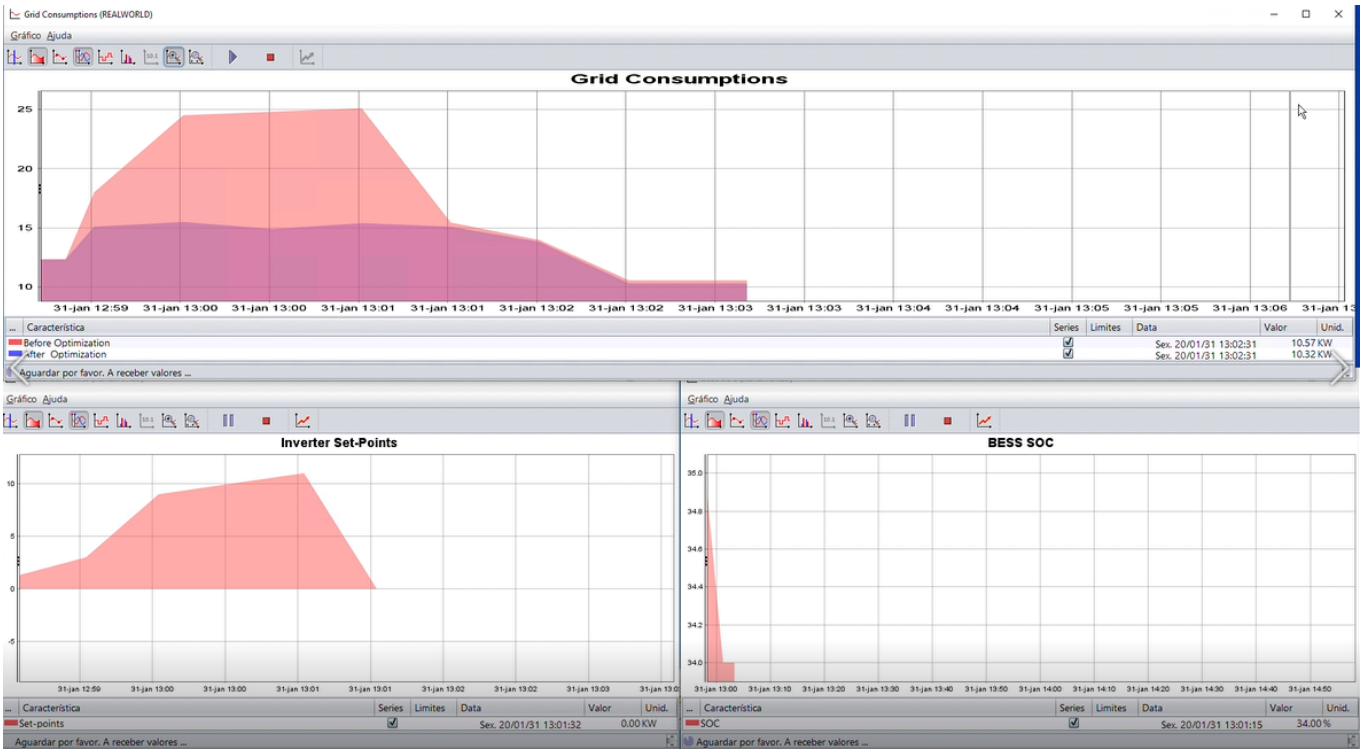

Figure 4 – View of the management system, providing real-time data from the grid – Use Case: peak-shaving

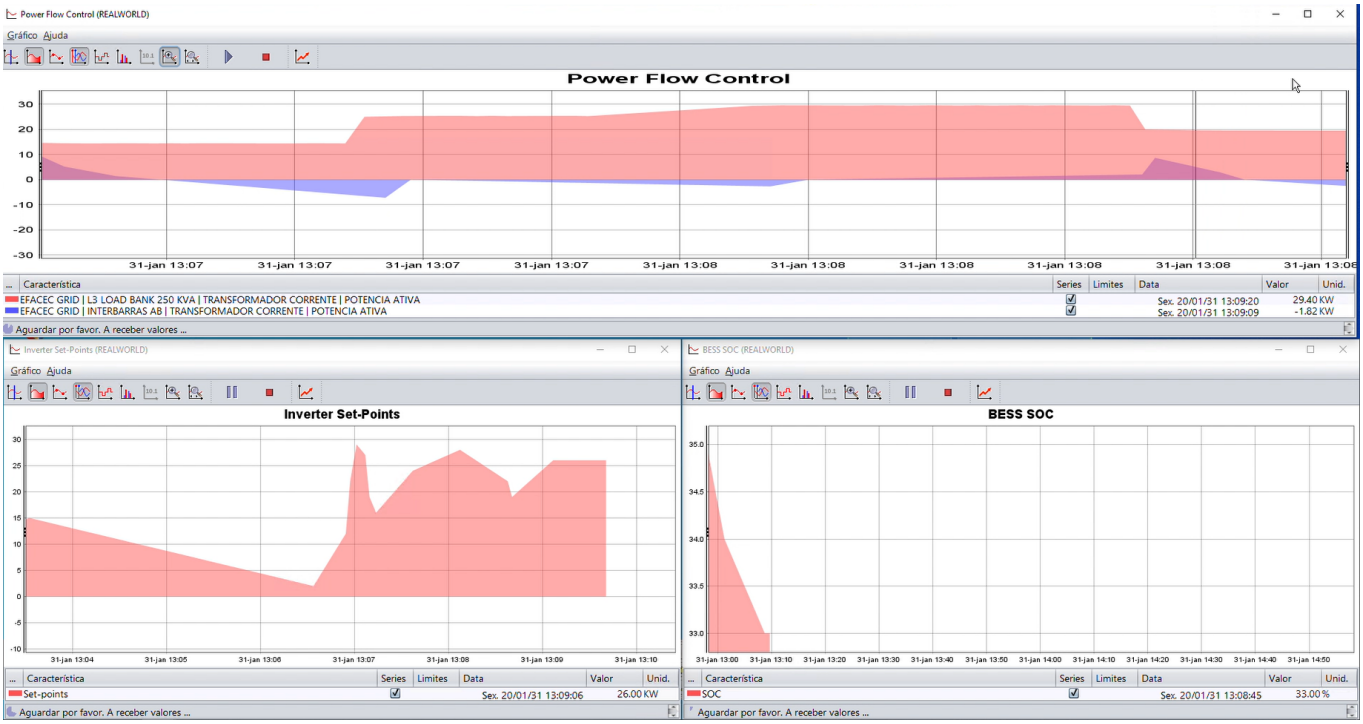

Figure 5 - View of the management system, providing real-time data from the grid - Use Case: power flow control

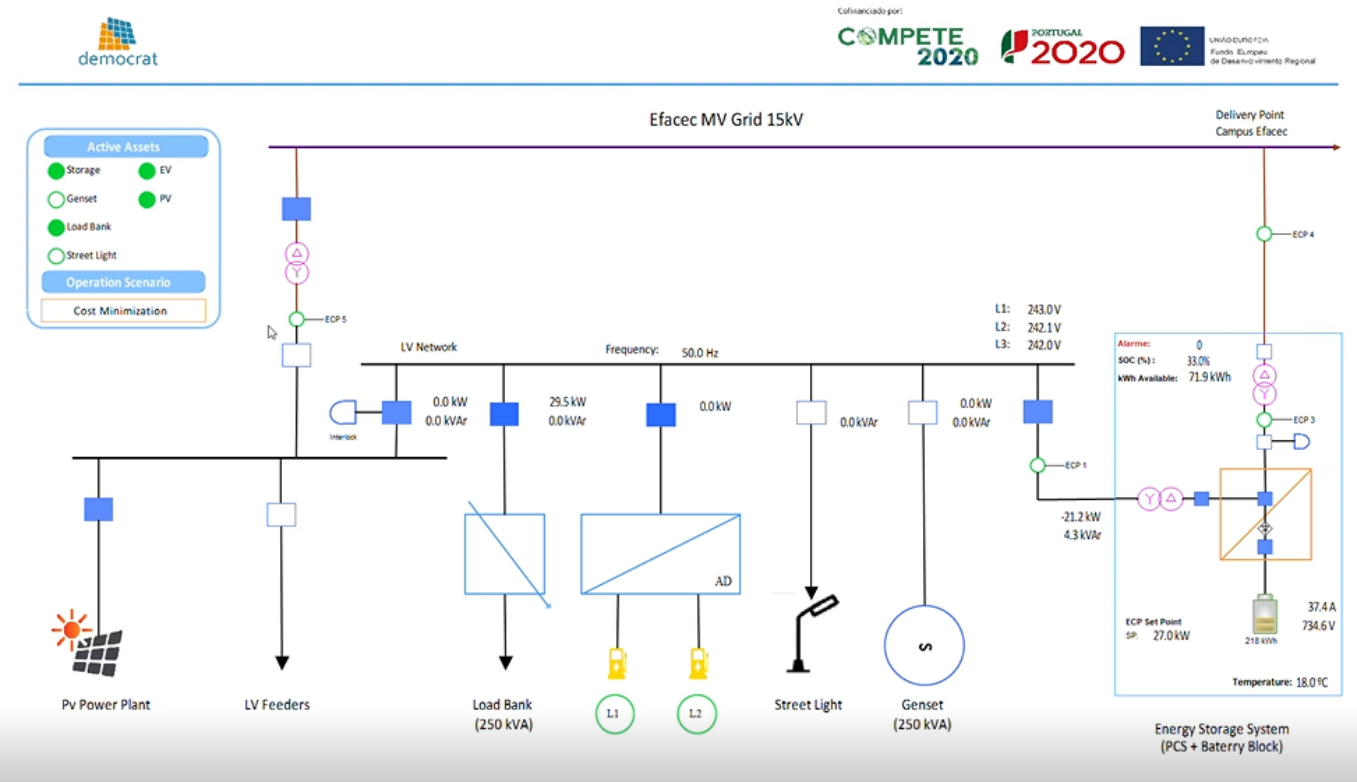

Figure 6 - View of the management system, providing real-time data from the grid - One-line diagram dashboard