http://www.democrat-project.efacec.com/

DEMOCRAT

Deliverable D5.2 – Laboratory Integration Report

Activity: Integration of the solution components and installation in the demonstrator's grid

Editor:	Afonso Lopes
Dissemination level: (Confidentiality)	Public
Suggested readers:	DEMOCRAT Team
Version:	1.1
Total number of pages:	12
Keywords:	BatLab, Batteries, battery inverter, MBMS, BMS, micro-grids, integration

DEMOCRAT ABSTRACT

The DEMOCRAT project aims at demonstrating an integrated and innovative micro-grid concept applied to LV and MV networks, as a suitable solution for efficiently managing their distributed energy resources (DER), working simultaneously as a flexible asset of the distribution networks.

DEMOCRAT is a project co-funded by:

COMPETE 2020 PORTUGAL 2020 UNIÃO EUROPEIA Fundo Europeu de Desenvolvimento Regional

Document

Name	Deliverable D5.2 – Laboratory Integration Report	
Document No.	AS20000082	
Revision and Date	1.1	2020-01-28
Project	DEMOCRAT	
Made by	Afonso Lopes	
Reviewed by	Sérgio Lopes	
Approved by	Luís Marques	
Total Pages	12	

Language Requirements (for non-native English speakers)

In order to fully understand the content of this document, it is therefore recommended that the reader possesses a language proficiency equivalent to B1 level, according to European Language Levels

Disclosure

Revisions

Rev.	Date	Comments	Author
1.0	2019-03-29	Document release	Afonso Lopes
1.1	2020-01-28	Correction of website URL	Alberto Bernardo

Executive Summary

This deliverable presents the report of the integration of all components at the BatLab, which corresponds to the laboratory implemented prior to the demonstration site.

The activities performed and described in this deliverable comprise:

- Main components description
- Architecture of the integrated components
- Integration report

Table of Contents

List of Figures

List of Tables

NO TABLE OF FIGURES ENTRIES FOUND.

Glossary

BMS	Battery Management System
DER	Distributed Energy Resources
LV	Low Voltage
MBMS	Master Battery Management System
MV	Medium Voltage

1. Introduction

1.1 Scope and Purpose

The aim of this deliverable is to present the report of the integration performed on the laboratory facilities – the BatLab – prior to the demonstrator deployment.

The activities performed and described in this deliverable comprise:

- Main components description
- Architecture of the integrated components
- Integration report

The components meant to be integrated during the laboratorial validation procedures address only the power conversion system, composed by the battery system, the inverter and the energy storage controller.

2. Main Components Description

The list of the integrated components is the following:

- Two (2) battery racks
  - Sizing: 2 * (109 kW / 109 kWh), comprising two (2) BMS and One (1) MBMS
- One (1) 100 kVA battery inverter, to test the main on-grid power conversion features
- One (1) 100 kVA battery inverter, to test the main off-grid power conversion features
- One (1) 100 kVA load bank
- One (1) 630 kVA step-up transformer (0.4 / 15 kV) connected to the MV grid
- One (1) energy storage controller (ES Controller)
- One (1) Master BMS
- One (1) Synchro-check device with voltage measurement and control features
- One (1) LAN switch
- Set of DC power cables
- Set of DC voltage and current sensors

3. Architecture of the Integrated Components

Figure 1 depicts the overall integration of the components at the BatLab.

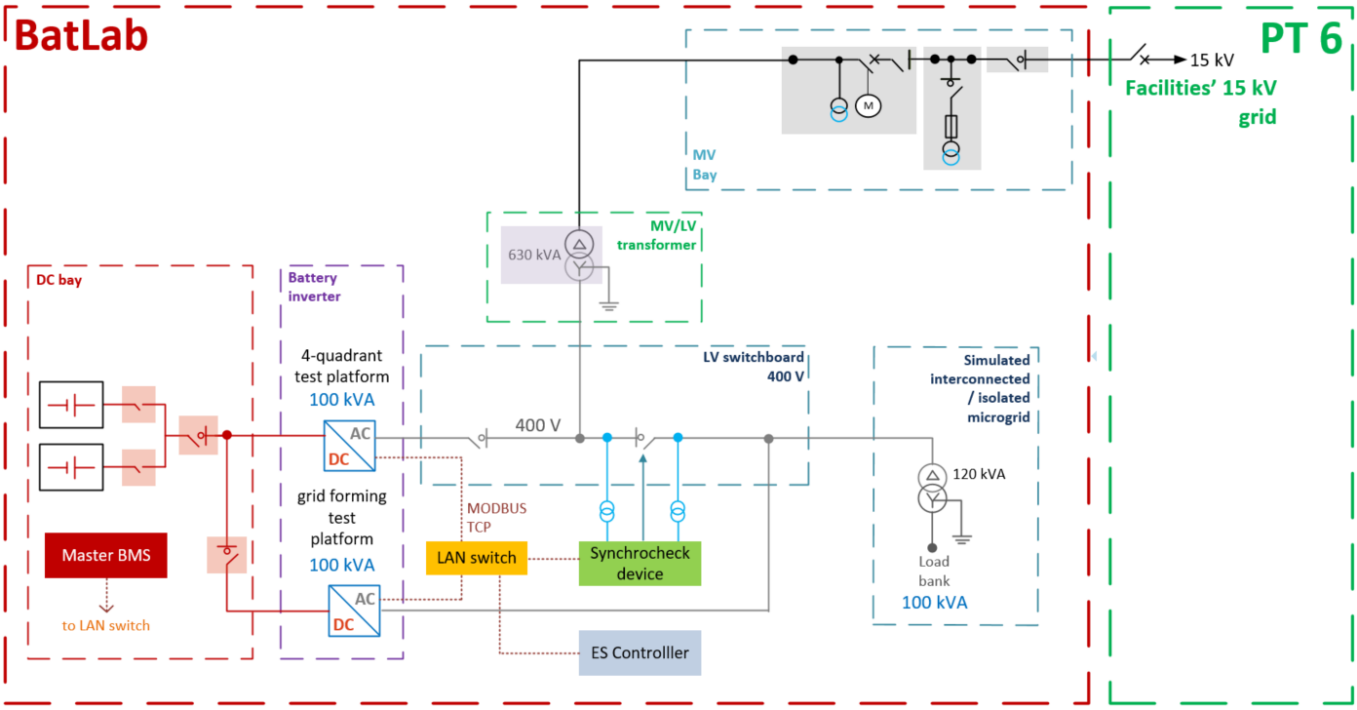

Figure 1 - Architecture of the integrated components at the BatLab

One battery inverter (400 V output via a star phase configuration with neutral to ground) was tested to perform 4-quadrant features validation, directly operating over the DC bay comprising batteries. The overall goal was the validation of grid-supporting and other energy storage features.

Another battery inverter (400 V output via a delta phase configuration) was connected so that it could operate in back-to-back mode together with the original battery inverter, during the initial stages of the grid forming tests and validation.

At those initial stages, the original inverter performed to support the DC link. Subsequently, the batteries and the synchro-check device were integrated to perform the overall on-grid/off-grid modes transition, to enable the validation of the grid forming and other energy storage features.

4. Integration Report

The integration of the components was carried out according to the plan:

- The integration of the BatLab components was performed in February 2019, which comprised the initial setup, corresponding to the set of two battery racks, one storage controller, one MBMS and one 100 kVA inverter, the latter connected to an existing 630 kVA 15/0,4 kV step-up transformer of the power conversion tests platform;
    - This integration allowed the team to perform the tests of the interconnected microgrid, namely, to test the charging/discharging of the batteries, as well as to test their operation in:
        - Peak-shaving mode
        - Active power mode
        - Load/Generation following
        - Power factor correction
- In January 2020, the BatLab was further improved, by adapting the existing platform to integrate another 100 kVA kVA inverter operating back-to-back to the former inverter described above, in order to validate the on grid/off grid transition operation modes, which was also integrated to the storage system at the BatLab;
    - This integration allowed the team to perform the tests of the isolated microgrid, namely, to test the conversion system, specifically its operation in
        - Grid interconnected mode, performing grid support features
        - Isolated mode, performing grid forming features
    - Moreover, the integration allowed the team to test and validate the transition between modes

4.1 Evidences of the Integration Process

Figure 2, Figure 3, Figure 4 and Figure 5 show the integrated system at the BatLab.

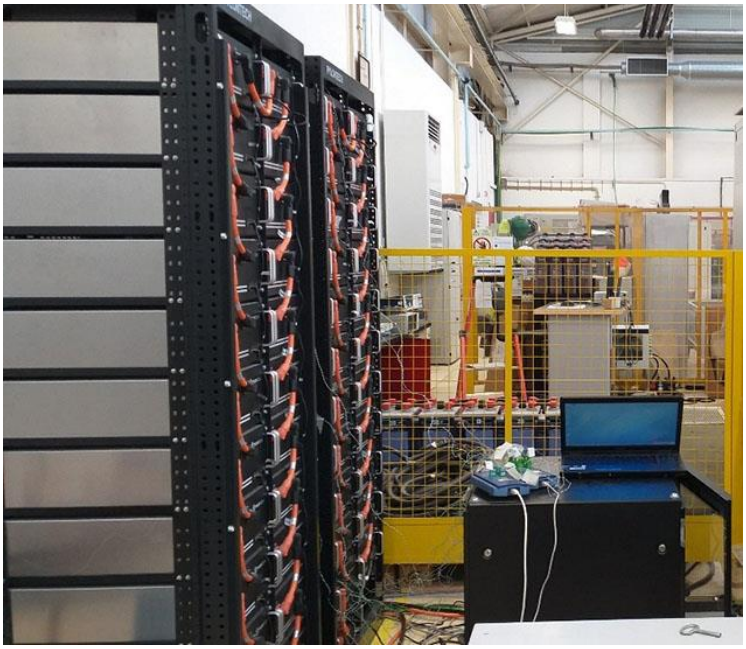

Figure 2 – View of the integrated batteries

Figure 3 – View of the integrated storage controller and MBMS

Figure 4 - View of the integrated 100 kVA battery inverter

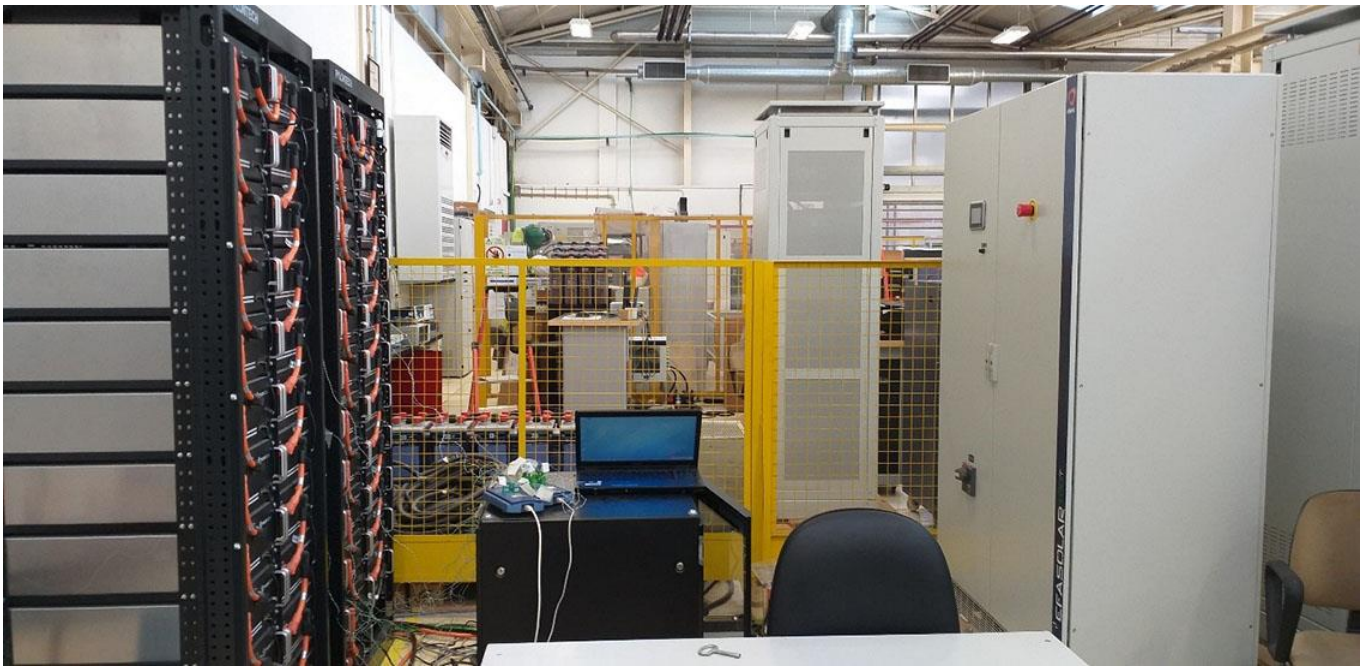

Figure 5 - View of the integrated system at the BatLab